Cambridge Assessment International Education

Cambridge International AS & A Level

CANDIDATE NAME

CENTRE NUMBER

CANDIDATE NUMBER

4477061864

PHYSICS **9702/53**

Paper 5 Planning, Analysis and Evaluation **May/June 2020**

1 hour 15 minutes

You must answer on the question paper.

No additional materials are needed.

INSTRUCTIONS

- Answer **all** questions.
- Use a black or dark blue pen. You may use an HB pencil for any diagrams or graphs.
- Write your name, centre number and candidate number in the boxes at the top of the page.
- Write your answer to each question in the space provided.
- Do **not** use an erasable pen or correction fluid.
- Do **not** write on any bar codes.
- You may use a calculator.
- You should show all your working and use appropriate units.

INFORMATION

- The total mark for this paper is 30.
- The number of marks for each question or part question is shown in brackets [ ].

This document has **8** pages. Blank pages are indicated.

© UCLES 2020

[Turn over

1 A student investigates springs made of metal wire, as shown in Fig. 1.1.

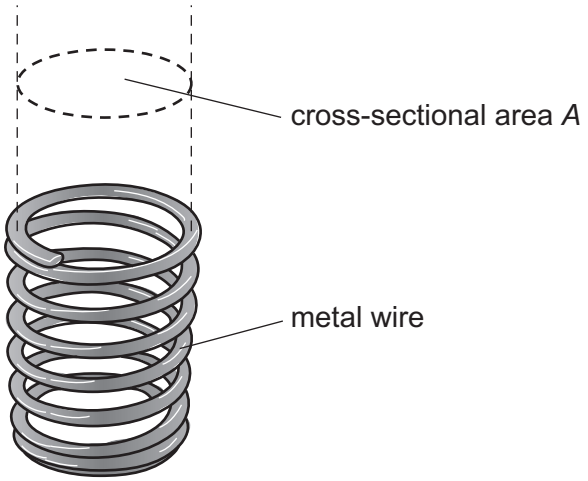

Fig. 1.1

The student constructs several springs from wire of thickness t. Each spring has a different cross-sectional area A.

The student investigates how the spring constant k varies with A.

It is suggested that the relationship between k and A is

$$k = \frac{\beta\rho t^4}{A^{\frac{3}{2}}N}$$

where ρ is the density of the metal, N is the number of turns of wire on the spring and β is a constant.

Design a laboratory experiment to test the relationship between k and A.
Explain how your results could be used to determine a value for β.

You should draw a diagram, on page 3, showing the arrangement of your equipment.
In your account you should pay particular attention to:

- the procedure to be followed
- the measurements to be taken
- the control of variables
- the analysis of the data
- any safety precautions to be taken.

© UCLES 2020

Diagram

.....

.....

.....

.....

.....

.....

.....

.....

.....

.....

.....

.....

.....

.....

.....

.....

.....

.....

.....

2 A student investigates the discharge of a capacitor through a resistor using the circuit shown in Fig. 2.1.

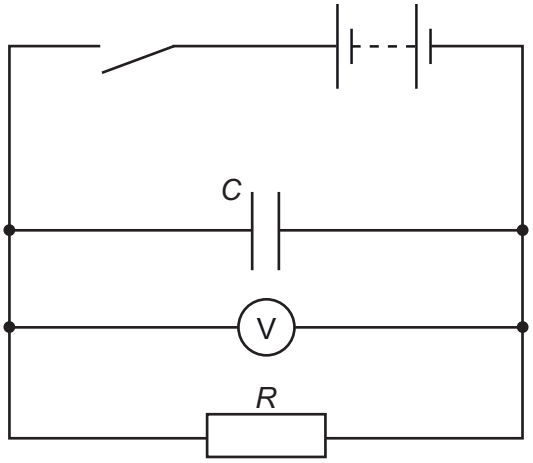

Fig. 2.1

The student initially closes the switch and charges the capacitor. The switch is then opened and a stop-watch is started. The capacitor discharges through the resistor. At time t the potential difference V across the capacitor is measured.

It is suggested that V and t are related by the equation

$$V = \left(\frac{Q_0}{C}\right) e^{-\left(\frac{t}{RC}\right)}$$

where Q_0 is the charge of the fully charged capacitor, C is the capacitance of the capacitor and R is the resistance of the resistor.

(a) A graph is plotted of ln V on the y-axis against t on the x-axis.

Determine expressions for the gradient and y-intercept.

gradient = ...

y-intercept = ...

[1]

(b) Values of t and V are given in Table 2.1.

Table 2.1

t/s	V/V	ln (V/V)
0	6.2 ± 0.2	
6	4.6 ± 0.2	
12	3.4 ± 0.2	
18	2.6 ± 0.2	
24	2.0 ± 0.2	
30	1.4 ± 0.2	

Calculate and record values of ln (V/V) in Table 2.1.
Include the absolute uncertainties in ln (V/V). [2]

(c) **(i)** Plot a graph of ln (V/V) against t/s.
Include error bars for ln (V/V). [2]

(ii) Draw the straight line of best fit and a worst acceptable straight line on your graph. Both lines should be clearly labelled. [2]

(iii) Determine the gradient of the line of best fit. Include the absolute uncertainty in your answer.

gradient = ... [2]

© UCLES 2020

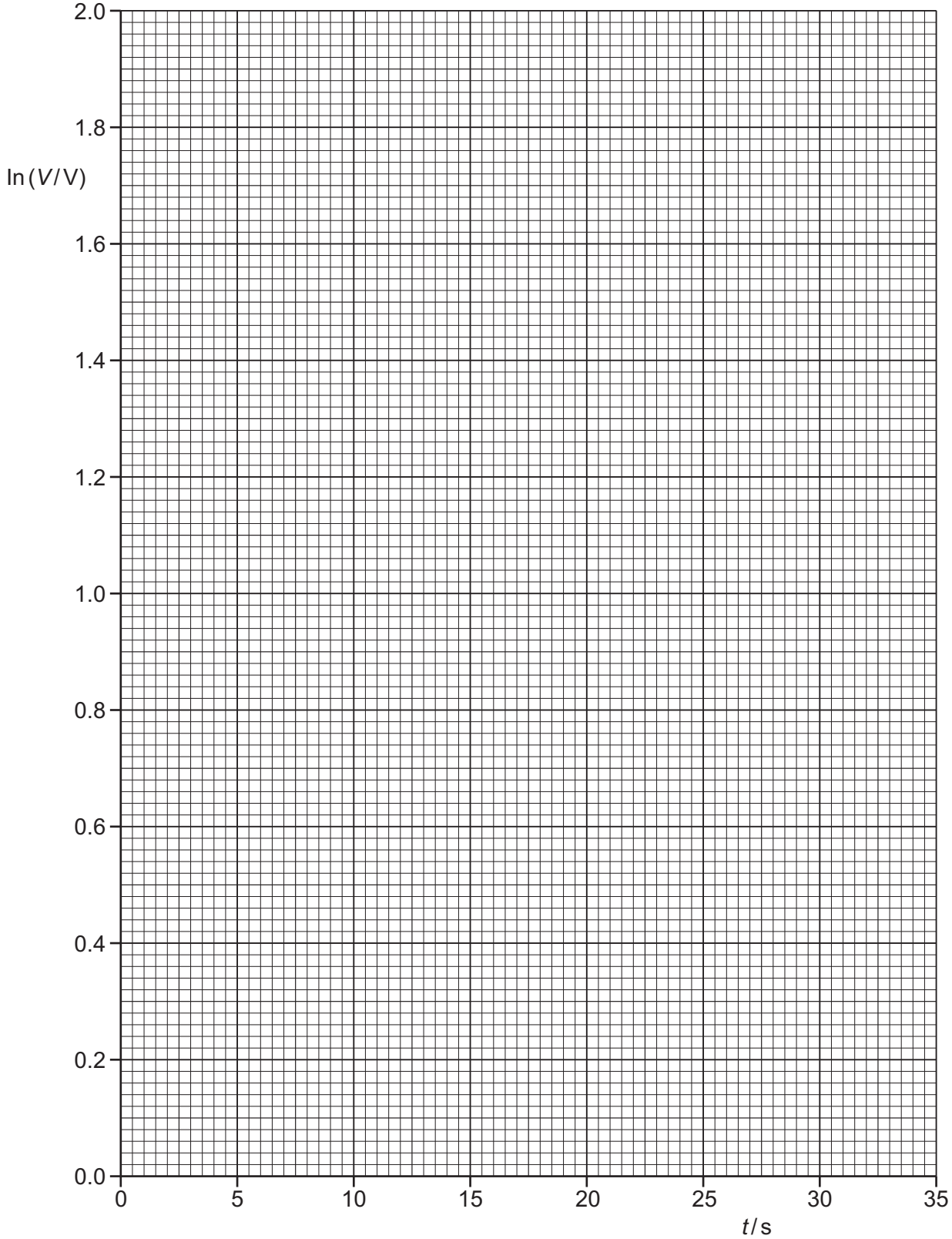
2.0
1.8
ln (V/V)
1.6
1.4
1.2
1.0
0.8
0.6
0.4
0.2
0.0
0
5
10
15
20
25
30
35
t/s

(iv) Determine the *y*-intercept of the line of best fit. Do **not** include the absolute uncertainty in your answer.

y-intercept = ... [1]

(d) (i) Using your answers to **(a)**, **(c)(iii)** and **(c)(iv)**, determine values of C and Q_0. Include appropriate units.

Data: $R = 39\,\text{k}\Omega$

C = ...

Q_0 = ...
[3]

(ii) The percentage uncertainty in the value of R is 5%.

Determine the absolute uncertainty in C.

absolute uncertainty in C = ... [1]

(e) Using your results, determine the value of V when the time t is 1.0 minute.

V = ... V [1]

[Total: 15]

To avoid the issue of disclosure of answer-related information to candidates, all copyright acknowledgements are reproduced online in the Cambridge Assessment International Education Copyright Acknowledgements Booklet. This is produced for each series of examinations and is freely available to download at www.cambridgeinternational.org after the live examination series.

© UCLES 2020